Antenna Systems

L.B. Cebik, W4RNL (SK)

Nothing in amateur radio provokes more debates than antennas. And no aspect of the art of radio communications is so filled with half information and downright misinformation. On the other hand, when you leave behind the textbooks and try to construct an antenna from available materials in the real world, nothing works like the textbooks say it should.

There are formulas for almost every conceivable type of antenna and antenna problem. Unfortunately, almost none of us live in free space and we cannot afford the cost of calculating the effect of every interfering object in our yard. Therefore, antennas will always be a matter of cut and try. Another ham's experiences may give us some ideas to try, but they will never guarantee us the same results.

That is half the fun of antennas. There is always something new or different to try. Eventually, what becomes important is not whether our antennas measure up to test range specifications, but whether a new antenna outperforms an old one. If we can communicate better we have made an improvement in the antenna system.

In this piece we shall look at some of the practical considerations that go into a selection of antennas for our station. These will include such matters as the space in our yards, the type of operating we do, the practicalities of erecting an antenna system, some accessories we may need or want, and finally the question of safety. None of these topics will settle the matter of whether a quad is better or worse than a Yagi or whether a dipole can outperform a vertical, but they do play a very significant role in helping us know what antennas we will use safely and well. In fact, the questions we shall look at may just be more important than theory for all but the ham with a perfect location—that rare individual whose ten wavelength rhombic sits atop a flat rotatable mountain floating in an ocean.

ANTENNAS AND YOUR PROPERTY

If you own more than forty acres of flat land, this section may not apply. Most of us live on smaller property, usually plots in cities or towns. The space we have for antennas consists of a yard running from a quarter to a full acre. On the property sits a house, possibly an outbuilding, and some trees. Around us live neighbors who generally have little understanding of amateur radio but who do have many television sets. The soil under our feet may be anything from desert sand to southern clay to Midwestern sod to

New England rock. If we listed all the incompatibilities between neighborhood living and amateur radio, we would be surprised that anyone ever did get an antenna up and working.

In fact, social pressures have taken on new levels of importance in recent years. Local ordinances and neighborhood protective covenants have attempted to restrict the freedom of amateur radio operators in erecting outdoor antennas. Some of these restrictions have been upheld in court. Thus, it pays to inquire into all pertinent laws and covenants before buying property on which you propose to build an antenna.

Also, laws and regulations restrict the height of antenna structures near airports. Further restrictions might exist near certain types of government installations. Beyond law issues, there are just some plain bad locations. High-voltage transmission lines in the vicinity may create enough noise to prevent any radio communication below the VHF bands. Industrial machinery may also create high electrical noise levels. Living next door to a high power commercial radio station can also restrict operation. Thus, the location we choose is the first consideration.

What we do with what we have is the next step in the process. This consists of three basic measures. First, we should protect our neighbors. Second, we should protect our property. Finally, we should take advantage of what our property offers.

Protecting our neighbors involves two areas of concern. The first is physical: be sure your antenna lies wholly on your own property. If it falls down, it should fall in your own yard. Wire antennas present little problem, but tall towers can be another matter. If it is not possible to assure that the antenna structure will miss a neighbor's property, at least be certain that it will miss all structures and people.

The electrical side of our concern means keeping the antenna system in perfect operating order so that it cannot contribute to any form of radio frequency interference beyond that occasioned by deficiencies in the neighbors' equipment. The system should radiate only those legal amateur signals you intend and nothing else.

Protecting your own property involves the same set of considerations. Antennas which might fall and damage your property should be located as far from expensive structures as possible; this precaution is not always possible in the small modem yard. Thus, extra measures, such as secure guying, should be standard practice.

Taking advantage of our property requires a good eye for possibilities. Careful planning, along with a few sketches, can help the process immensely. There is no adequate catalog of things to look for, but Figures 1 through 3 will illustrate the process. **Figure 1** is simply a sketch of a yard, perhaps typical, but probably different from yours. There are trees ringing an open area in the back yard. Since the open area is used for play by children, an antenna mast in the middle of it is out of the question. **Figure 2** illustrated some bad ways to use the space. The HF beam hovers over the house and has no guys. Two dipoles cross in the middle of the yard where they may occasionally rub. They have been mounted to wooden masts which might not have been needed if the owner had used some good planning. The VHF beam is on a mast far removed from the house, requiring a long, lossy coaxial cable run.

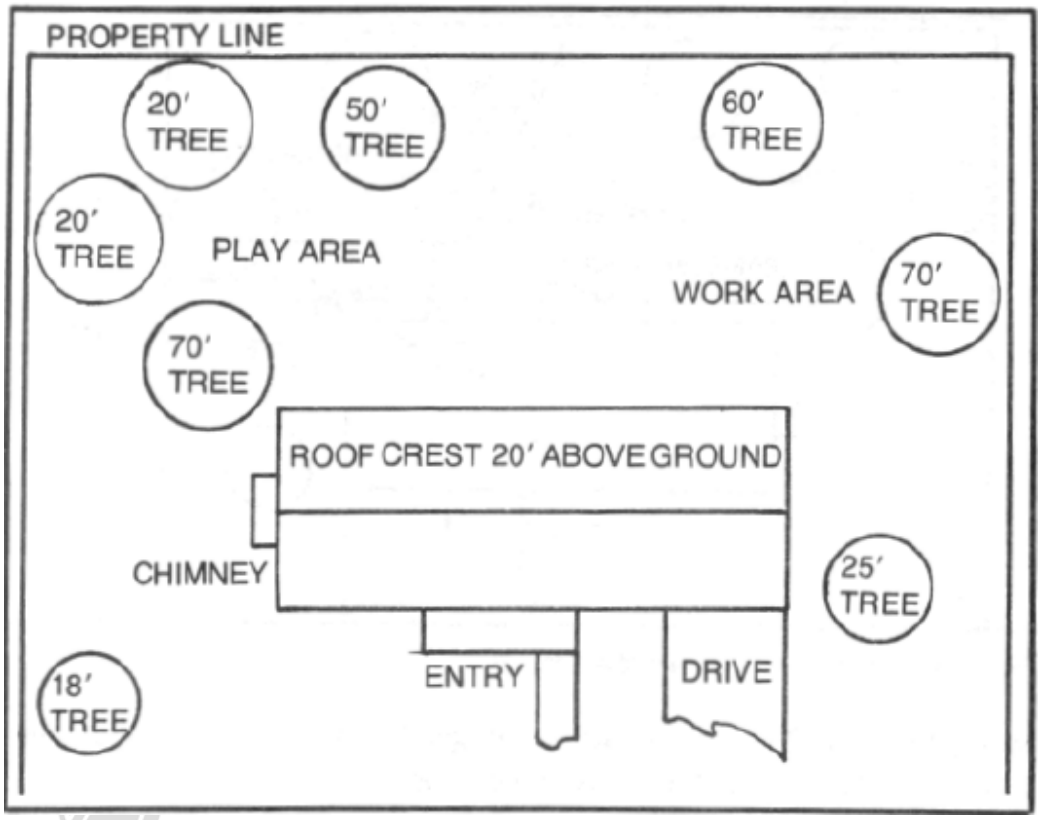

Fig. 1. A typical house and yard

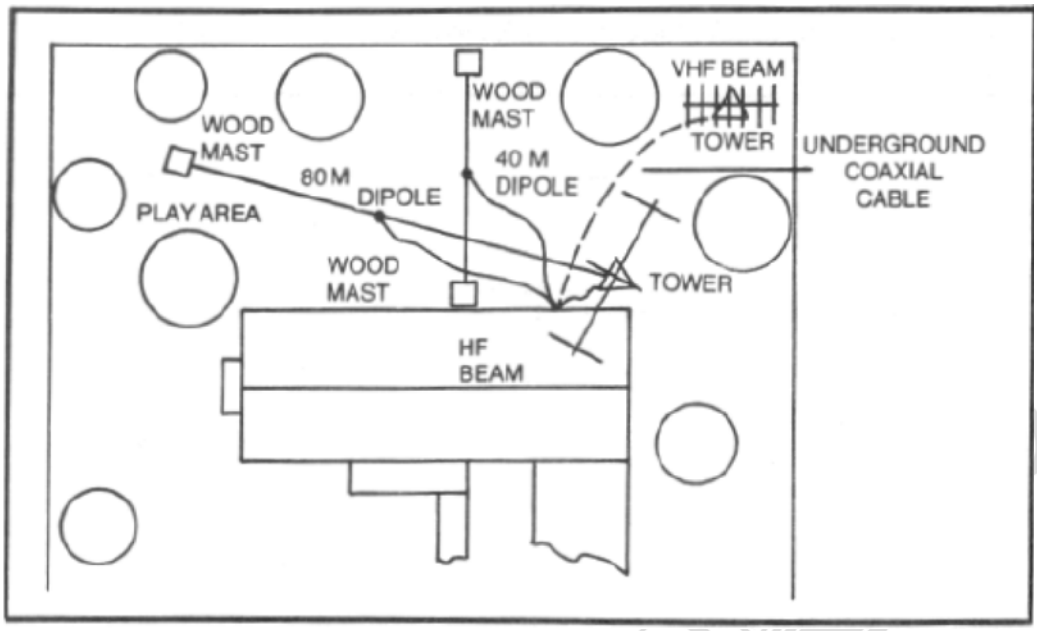

Fig. 2. A relatively poor arrangement of antennas

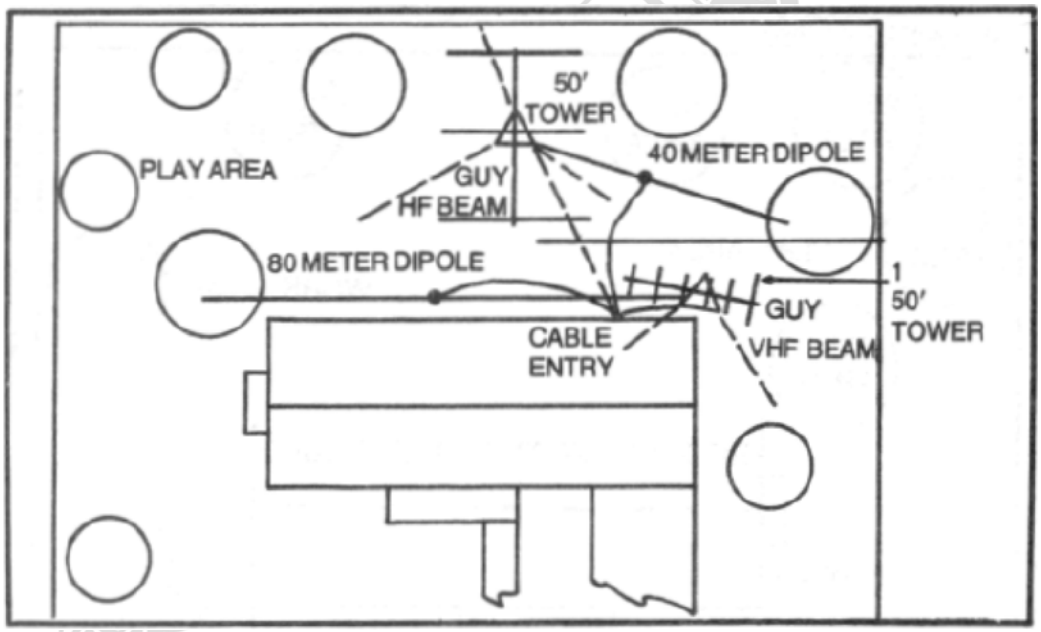

Fig. 3. A better arrangement of antennas

Figure 3 shows some improvements. The dipoles for 80 and 40 are run from the high trees without crossing, saving the cost and obstruction of wooden masts. The VHF beam has been moved closer to the house on a guyed tower. The much heavier HF beam has been moved away from the house to an open spot that still leaves most of the yard for play. There are other ways to use this property effectively, but the example is enough to show the principle.

In developing a sketch of your property, be sure to include the following items:

- Reasonably exact measurements of the yard and all major objects.
- Good estimates of the height of objects, and with trees, the maximum height free for use in hanging antennas.
- Location of the shack in the house and the point where antenna cables will enter.
- Areas of special use, such as patios and play areas.
- Special border problems, such as power lines.
- The route of telephone and power lines to the house, if they are not underground.
- The location and route of underground sewer and other utility lines (since it would not be wise to drive a ground rod through one of these). With your sketch, you are ready to try many ideas for antenna systems, and can save all physical labor until you are satisfied you have planned the best possible one for current and future operations.

ANTENNAS AND YOUR OPERATIONS

One of the major mistakes many hams make is to think that only the largest, highest, and most costly antenna system will permit satisfying communications in the amateur bands. Simple, inexpensive antennas will satisfy most requirements for good operation and in some cases will satisfy them better than more complex installations. Let us look at a few types of antennas and see what their general capabilities are. Then we can examine some types of operations with an eye toward selecting an antenna.

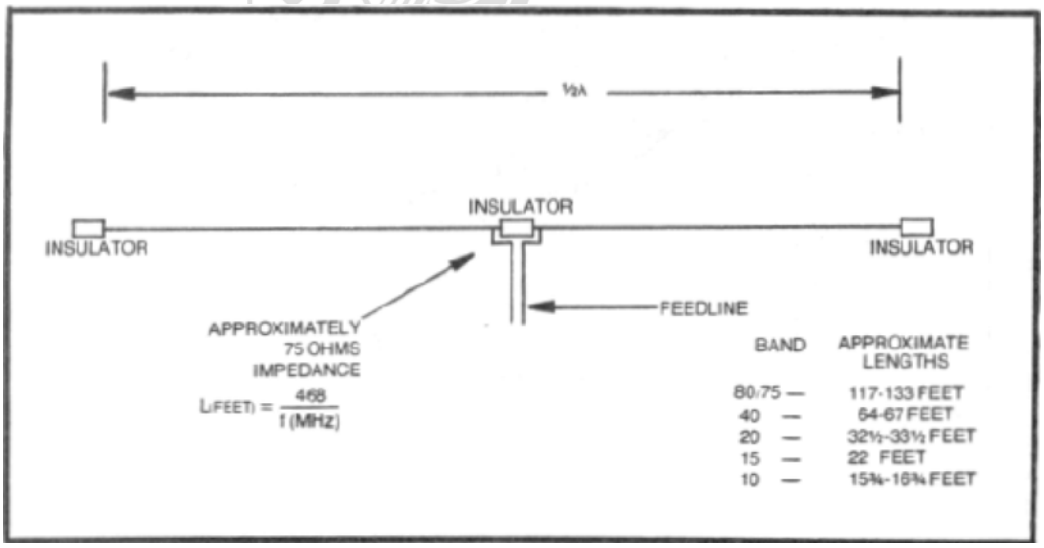

Fig. 4. The one-half wavelength dipole

Figure 4 shows the common half-wave dipole, along with the formula for starting your pruning. Most wire antennas require adjustment to their

surroundings to achieve the lowest SWR, and that may mean adding or subtracting wire. For 80 and 40, most dipoles will be elevated less than a half wave above ground. Low heights tend to eliminate the directionality of the broadside of the antenna. At 20 meters and above, directionality will reappear. With a high angle of radiation, including straight up, this 70-ohm antenna is very good for shorter range communications, as compared to the normal ranges for each band.

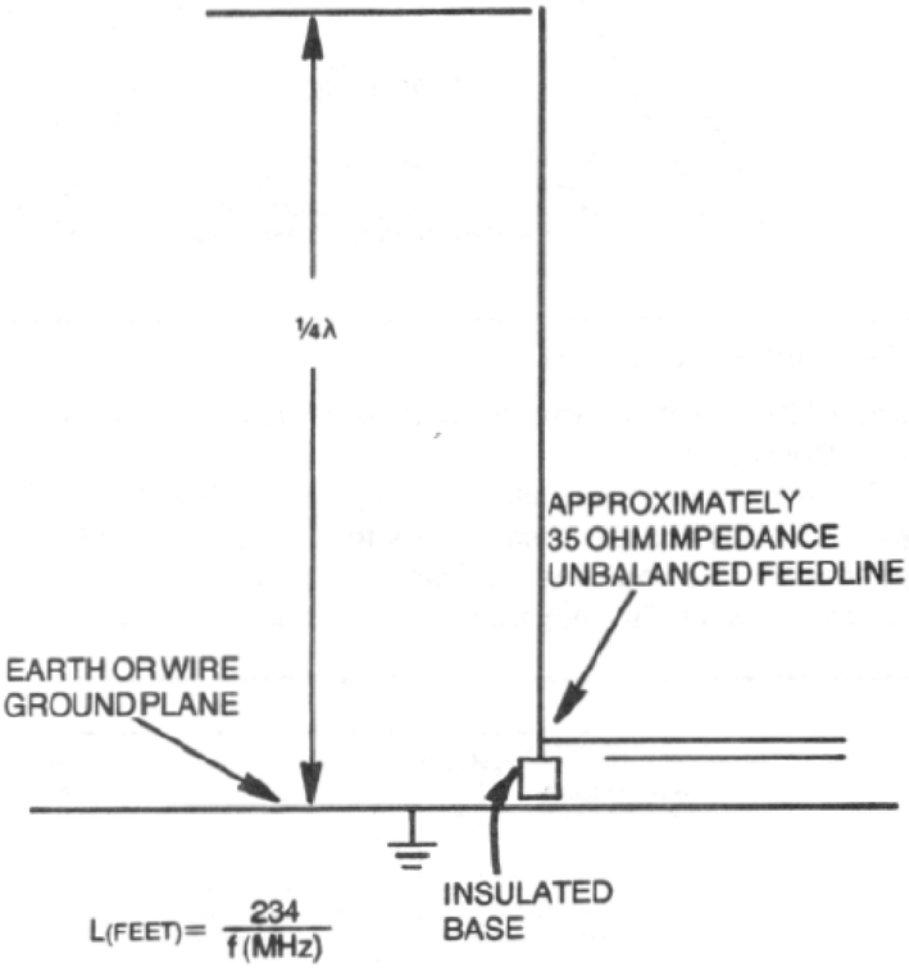

BAND	APPROXIMATE LENGTH
80	58-66 FEET
40	32-33 FEET
20	16.5 FEET
15	11 FEET
10	8 FEET

Fig. 5. The one-quarter wavelength vertical antenna

Figure 5 sketches the quarter wave vertical, with a starting formula. Ground mounted in a field of soggy pines, this antenna is a poor performer. Elevated or provided with a clear field and a good ground system, the vertical's low angle of radiation makes it a good omnidirectional antenna for long distance communications. Simple verticals are usually fed with 50-ohm coaxial cable.

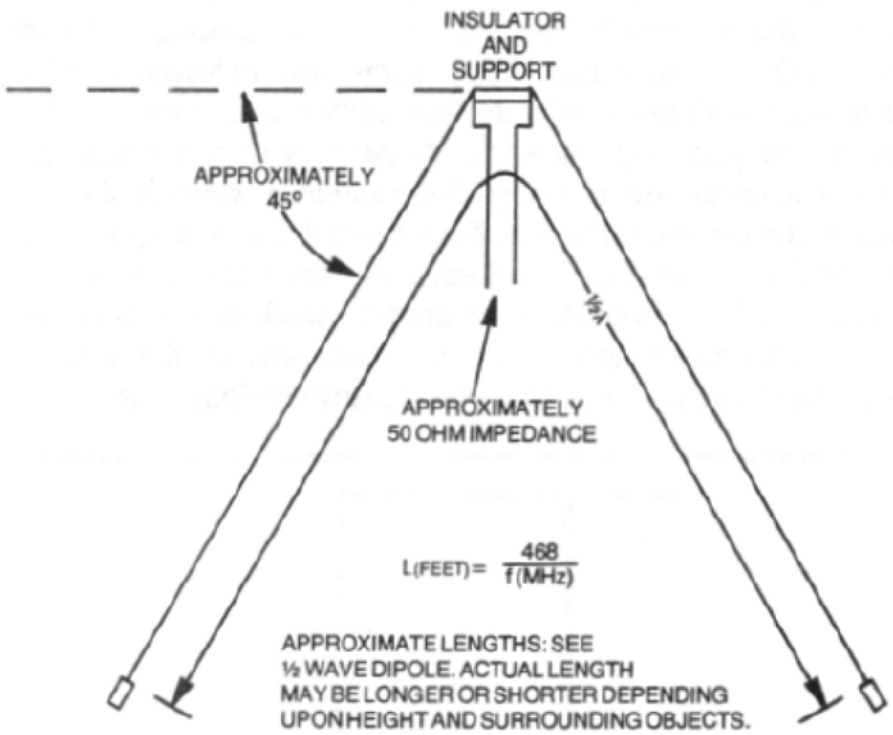

Fig. 6. The inverted-V antenna

The inverted-vee, shown in Fig. 6, operates much like a low dipole with relatively omnidirectional coverage. Its chief advantage is the ease of putting one up, since only one tall center support is required. We can tie the ends off at levels that are easy to work with but safely above the heads of people in the yard. 50-ohm coax works well with the inverted-vee.

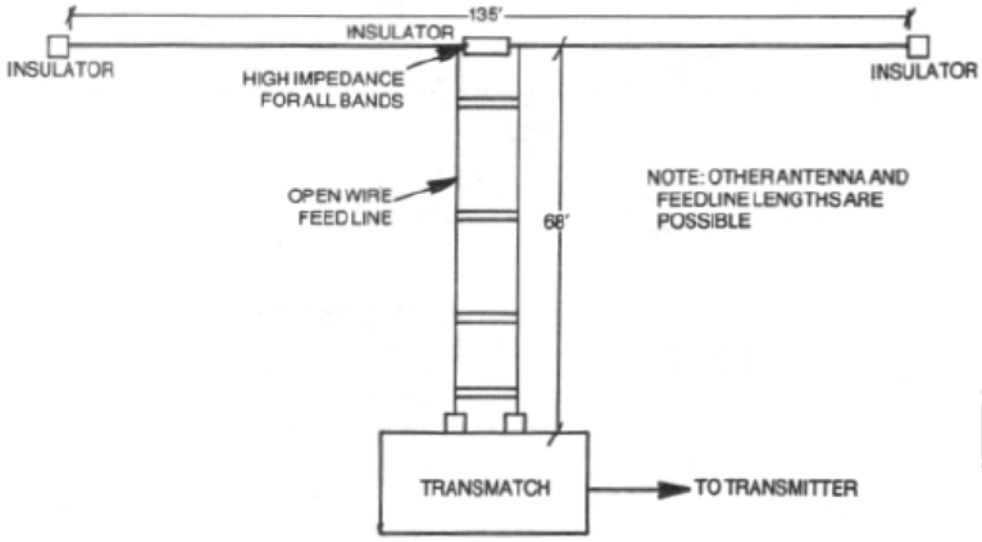

Fig. 7. The all-band doublet or "center-fed Zepp" antenna

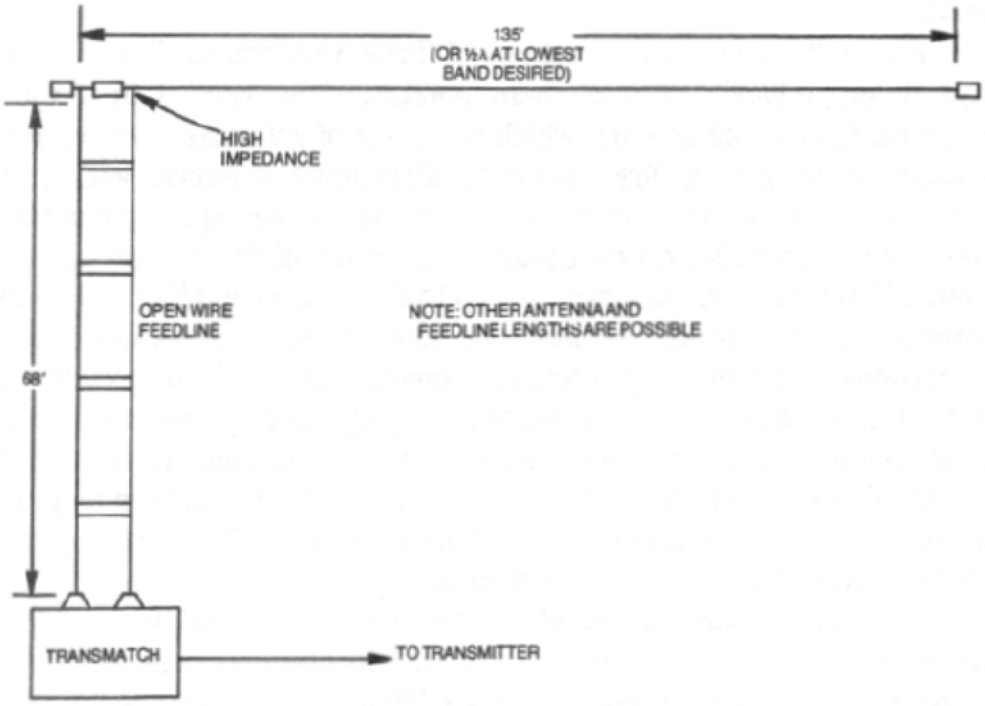

Fig. 8. The end-fed Zepp antenna

The all-band doublet or center-fed Zepp of Fig. 7 differs in several ways from the antennas just shown. First, all the preceding antennas can be fed with coaxial cable. Many hams use unbalanced-to-balanced transformers (baluns) built into the center connectors of the split antennas, although they will work satisfactorily with direct coaxial feed. The three antennas are also single band antennas which tend to suppress energy at other frequencies. The

Zepp, by contrast, is designed to be used with parallel transmission line such as 600 ohm open wire, and a transmatch unit is mandatory to permit matching the transmitter to whatever impedance appears at the shack end of the feeders. The dimensions shown illustrate only one of many versions. **Figure 8** shows an end-fed Zepp. With an appropriate transmatch, Zepps work well on all bands, 80 through 10.

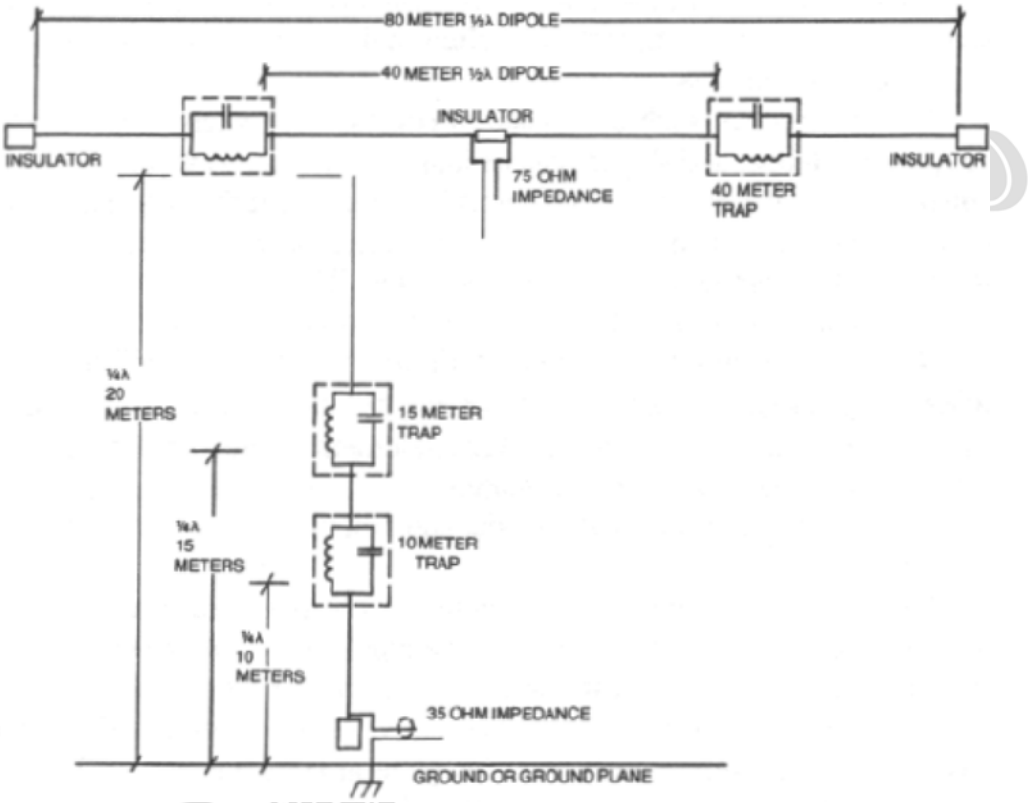

Fig. 9. Trap dipole and vertical antennas

Figure 9 shows multiband versions of the dipole and vertical, using traps. The traps act like open circuits for the appropriate band. This popular system for achieving multiband operation from one feedline has the disadvantage of efficiently transmitting harmonic energy if the energy is on one of the bands to which the antenna is tuned. The antenna is only slightly less effective than the corresponding single band dipole or vertical.

Figure 10 shows the outlines of three Yagi beams. The first is a typical single-band, three-element antenna. The second is a three-element. three-band antenna which is typical of antennas used by many stations making their first move to directional antennas with some measure of front to back advantage. Since the element spacing must be a compromise on at least two bands—usually on all three—the gain and front-to-back ratio will not measure up to the single band Yagi. The third antenna with five or six

elements for three bands removes most of the compromise by providing working elements of nearly or exactly the correct spacing on each band. Since most Yagis end up atop tall towers, most operators attribute too much gain to the antenna and too little to the height Dipoles more than 60 feet in the air will also perform well, but without the rotatable directionality of the Yagi. At VHF, the Yagi with up to *22* elements has become a standard.

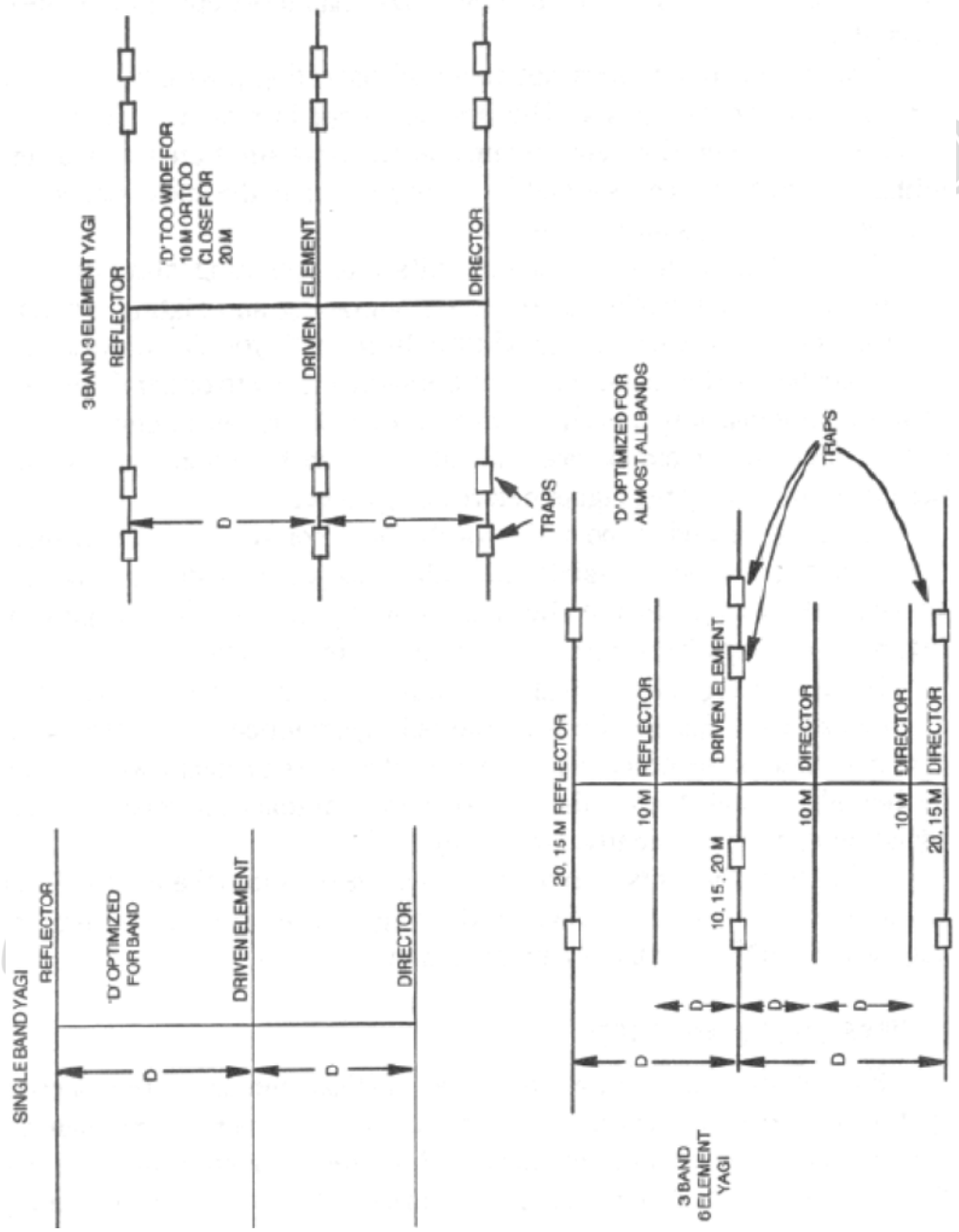

Fig. 10. Single and multi-band Yagi beam antennas

Figure 11 shows the two-element cubical quad. Since the wire loops »ire so light, tri-band versions are common. Most two-element quads work better than the three-element, three-band Yagi but not as well as the single band three-element Yagi. Quads also seem to work better than Yagis in areas containing interfering objects, such as tall trees. Quads can be built with more elements just as Yagis can, with consequent increases in structural complexity. There appears to be no decisive advantage from orienting the quad as a square or as a diamond. Both the Yagi and the Quad have input impedances other than 50 ohms and generally use some form of matching at the antenna.

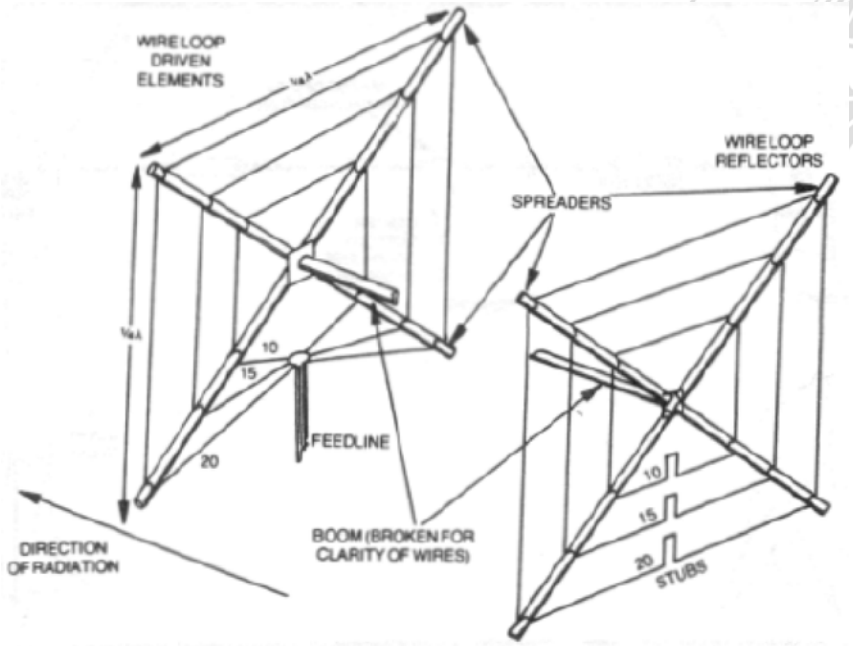

Fig. 11. Elements of the two-element cubical quad antenna

Other antennas such as phased verticals, wire Yagis, phased wire arrays, delta loops, and slopers can be found in antenna books and articles. One of them may suit your operation and property, but the antennas listed above—most of which are available commercially as well as home brew—are the common choices of most hams. The next question is to be asked: what kind of antenna does each type of operating call for?

The DXer wishing to compete with other avid DXers will need the tallest, highest gain antenna that he or she can afford in terms of dollars, safety, and maintenance effort. Multi-element Yagis and quads are common to these operators, although a few have the space to erect rhombics, wire beams for lower bands, and other less well known antenna systems.

The state and regional traffic handler has little use for a beam, since most of his or her work is on 80 or 40. The dipole or vee often outperforms the vertical, since communications are at relatively short ranges.

For the rag chewer, a set of dipoles, vees, or a multiband antenna such as the Zepp serves very well for general communication. The rag chewer is often less hurried than other hams; the need to retune the transmatch for a Zepp is no hindrance to good operation.

There are almost as many types of contests as contesters, so that matching antennas to operations is more difficult here. DX contesters need high gain directional antennas. The casual state contester can work well with simpler antennas. The operator who participates in simulated emergency tests may want antennas which are easy to put up and take down.

VHF FMers can generally work with one-quarter and five-eighths wave whips or relatively small vertical yaps. The VHF-SSB or CW operator will need long Yagis, often arrays of them, for difficult point-to-point paths.

The casual DXer who is perhaps also a rag chewer may find the vertical to his or her liking, especially if it can be elevated above most of the surrounding objects. The roof-top vertical with drooping radials provides good coverage and much more DX than most operators believe possible. This short survey does not cover all operating possibilities, but it does accomplish two goals. The first is to set in motion a process of thinking about operations and antennas at one time since the two are very intimately related. The second is to suggest that the most expensive antenna is not always the best choice.

The best antenna is the one that suits your operating interests, your property, and your wallet. Even when upgrading an existing antenna, there are preferred areas of expenditure. In general, you should put height above number of elements. If it takes the same money to either double the gain of an antenna or to raise it to twice the height, then assuming the same construction and maintenance difficulty for each option, you should seriously consider going higher before going bigger.

At the other end of the scale, for the operator so restricted in space that no antenna seems possible, the rule is to get the antenna outside if possible. A thin wire end fed by an L circuit by the window, as shown in **Figure 12**, will very likely do better than an indoor antenna.

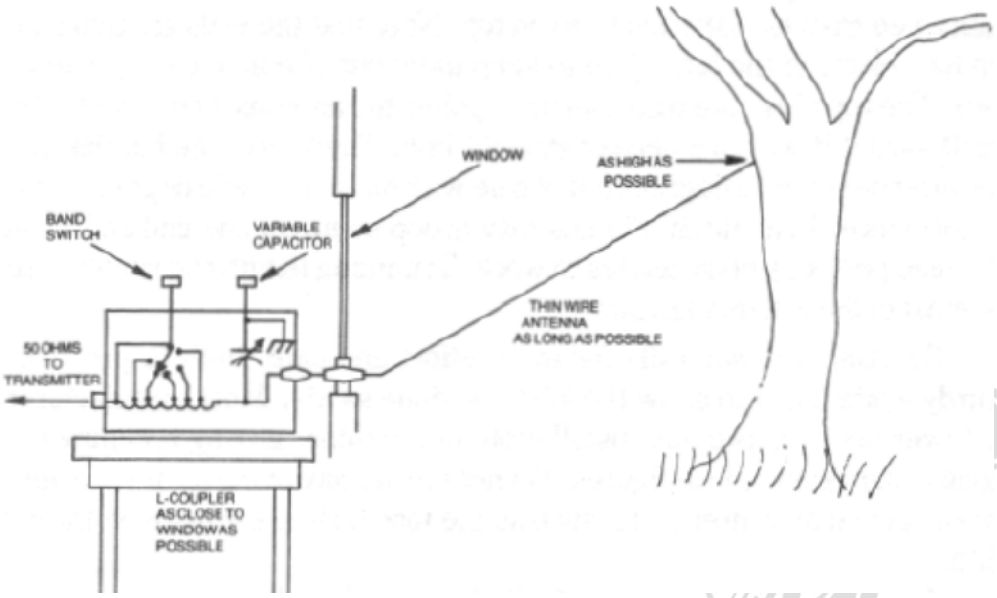

Fig. 12. Random length "invisible" wire antenna with coupler

None of these rules of thumb guarantee success, nor does violating them doom us to failure. Perhaps the only guaranteed rule is that if the antenna system we erect works just as the book predicts without any further adjustment, then is the time to worry. Antennas normally require adjustment, not only initially, but as they age.

With these thoughts in mind, we can move back into the yard and look at some of the things we can use to advantage and at some of the items we may want to construct for our antenna system.

TOWERS, MASTS, AND TREES

Except for short ground-mounted vertical antennas, the support system for your antenna may require as much or more work than the antenna itself. In general, antennas work better the higher they are, and the construction of tall supporting structures may prove to be the limiting factor for your antenna system.

For dipoles, Zepps, and inverted-vees, trees are both a blessing and a curse. Two tall straight oaks, 150 feet apart are a blessing if you wish to string a 75 meter dipole, but the spreading chestnut tree a third of the way along the path is a curse. Dipoles can be strung through trees and will work, if we are willing to live with SWR excursions with changes in weather and the season. But a clear path makes life so much simpler.

Nylon rope has largely replaced wire for dipole support. By throwing rope over high but sturdy branches, most operators avoid the complex pulley

systems formerly used with wire. However, trees can overgrow nylon rope just as they did wire, hence flexing the system several times a year by lowering ends of the dipole is wise. **Figure 13** shows a simple dipole system.

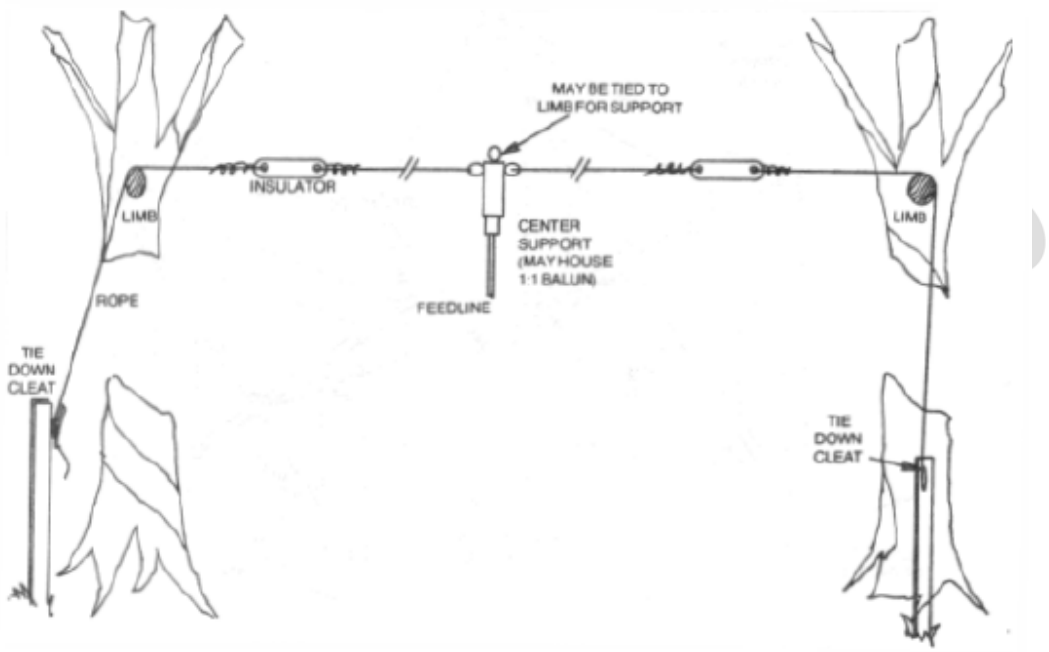

Fig. 13. Simple scheme for supporting a dipole antenna

If trees are not available in the right places, at the right heights, or with the right degree of sturdiness, then we may have to build one or more masts to support a dipole. For ease of construction, try to use a tree for at least one end of the system. We can build masts of wood (well preserved with varnish or paint) as suggested by **Figure 14**, which shows only one of many systems. In this design, the house helps with support, but guying is as important for tall masts as with towers. There are also guyable push-up metal masts for up to 40 feet, but beware of their load limitations.

The need for a mast in a treeless yard or the existence of only one tall tree in the yard gives rise to thoughts of inverted-vees. **Figure 15** shows such a vee from the side and from on top. Note that the ends are tied off to ten foot masts at the fence line to keep them out of reach of people in the yard. The top view illustrates another point: the antenna would not fit this small yard if it was in a perfect straight line. Therefore, the builder bent the antenna some 20 degrees out of true with no appreciable degradation of performance. In addition, dipoles may droop some on one end and Vs do not need perfectly equal angles to work. Trimming length can compensate for most of these irregularities.

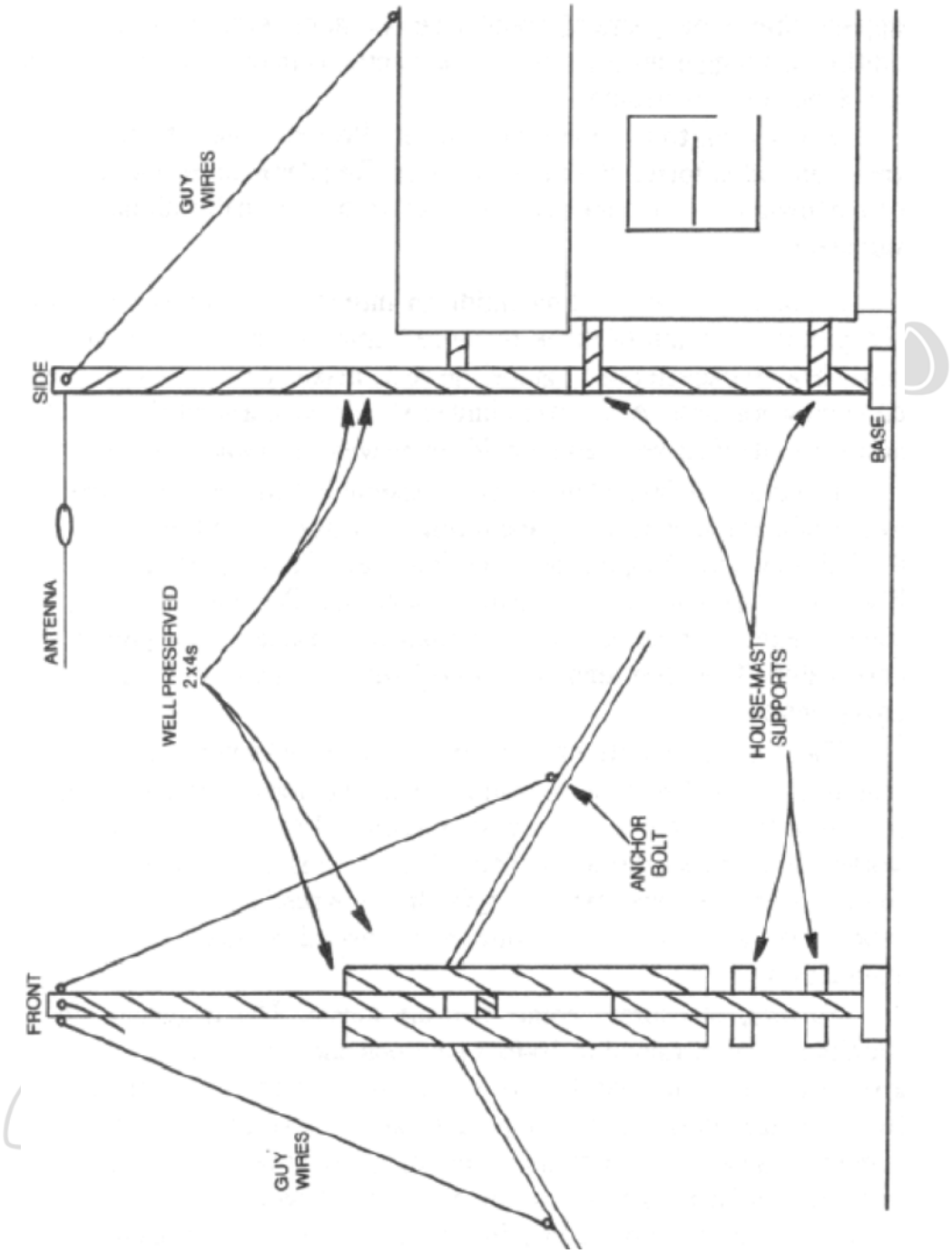

Fig. 14. Simple wooden mast for dipole support

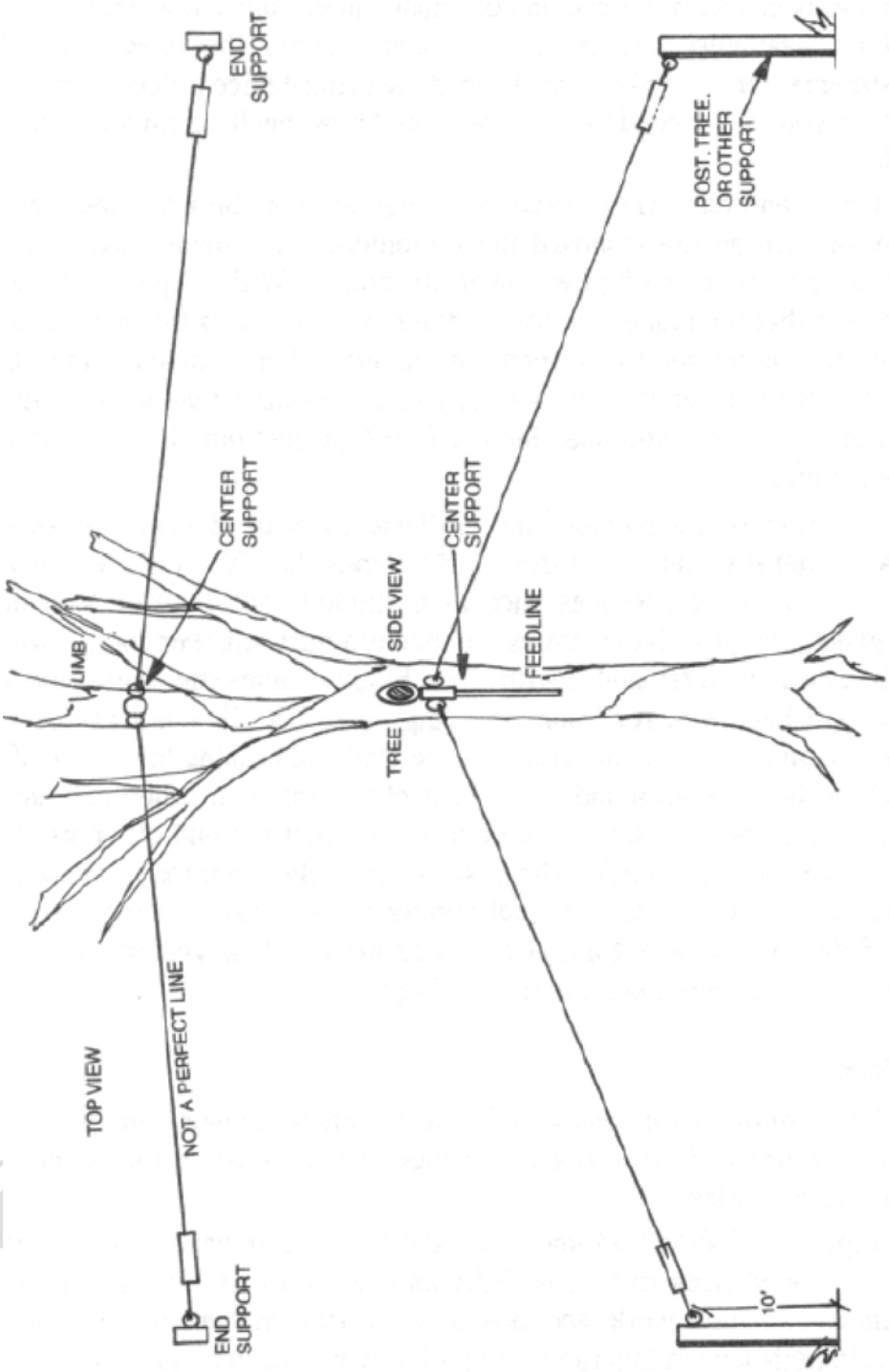

Fig. 15. Elements of inverted-V installation

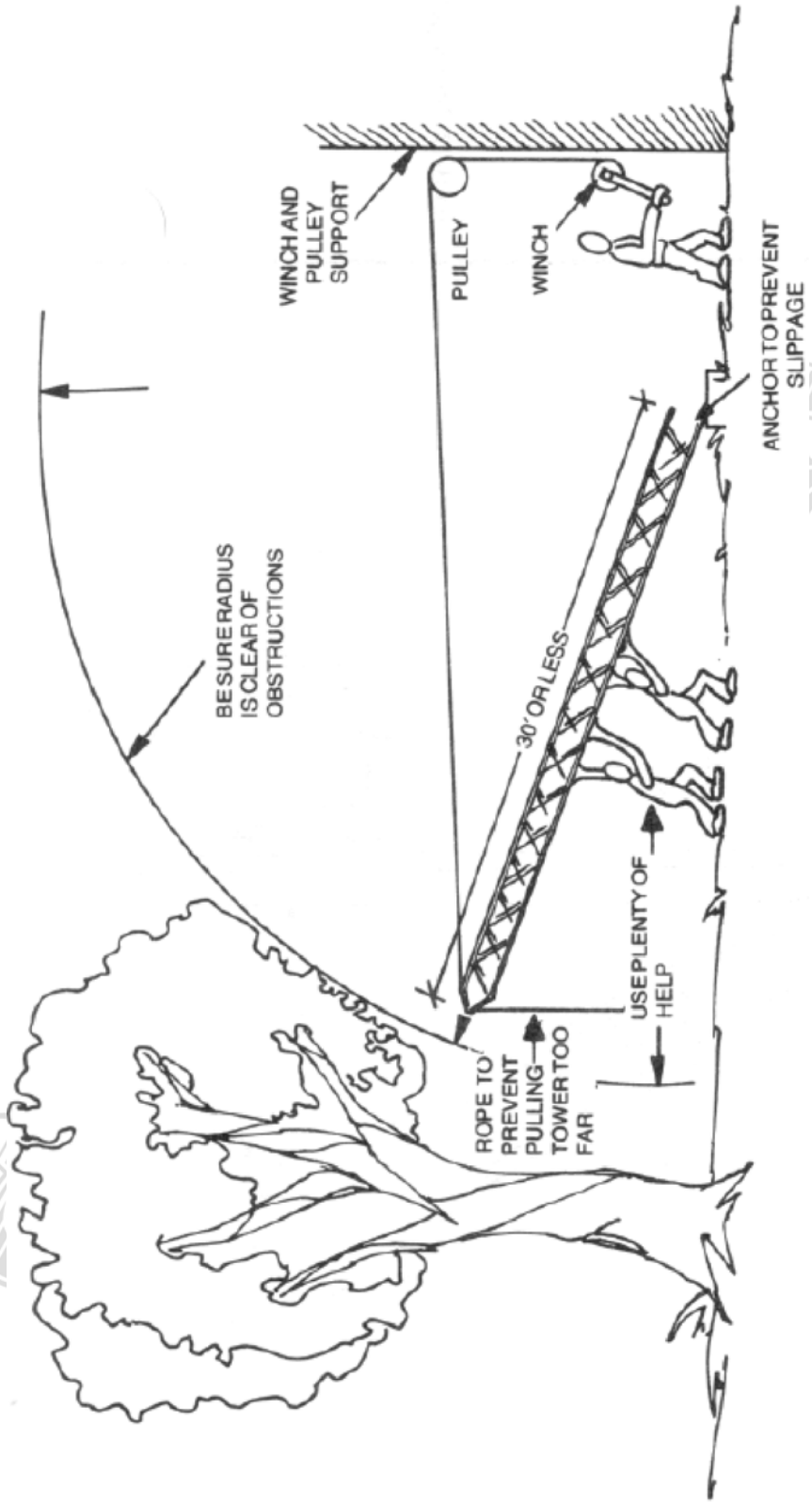

Fig. 16. Raising a short tower from the ground

Erecting a tower calls for more effort and care, both to produce a sturdy system and to allow the job to be done safely. Most manufacturers of tower sections provide installation instructions, guying recommendations and maximum load figures. Do not violate any of these. If you cannot make certain measurements, such as the load factor, estimate on the *safe* side. Among the most common faults hams make when installing towers are these:

- They skimp on the depth of the mounting hole or on the amount of concrete used to hold the base. Some do not provide gravel and drainage as recommended. It is better to use more than recommended, no matter how hard the ground is for digging.
- They use fewer guys at wider distances with lighter guy wire than recommended. The practice should be just the opposite if you must vary from the recommendations.
- They fail to obtain certain recommended parts, such as guy loops for going around tower legs. Most of the recommended parts have good reasons behind them, as in this case. A wire cut through by the tower leg edge leaves an unguyed tower. Again, if you must vary, use better parts.
- They put too much antenna on too light a tower. This sometimes happens after a few years of trouble free operation with one antenna. The addition of a bigger antenna or a second antenna may be more than some parts of the system can take.
- They fail to maintain their tower. Periodic inspections for rust, stress, and other forms of wear are needed. Regular maintenance is crucial to long tower life and to the safety of everything within the falling radius of your system.

Installing a tower and mounting an antenna at its top is not work for one person. A team of three or more hams, at least one of whom has considerable experience to guide the rest, makes a safer as well as more efficient work force. Any tower climber should wear a safety belt and know how to use it effectively, and should not be wearing a watch or jewelry.

Towers up to 30 feet or so can be assembled on the ground and raised by a combination of winching and lifting, as suggested in the sketch in **Figure 16**. Above that, the gin pole comes into play. The gin pole, as sketched in **Figure 17**, is a device for raising tower sections. The top of the pole, which should be longer than the tower sections to be raised, has a pulley for the hoist cable. The other end is equipped with prongs to fit over the tower cross members.

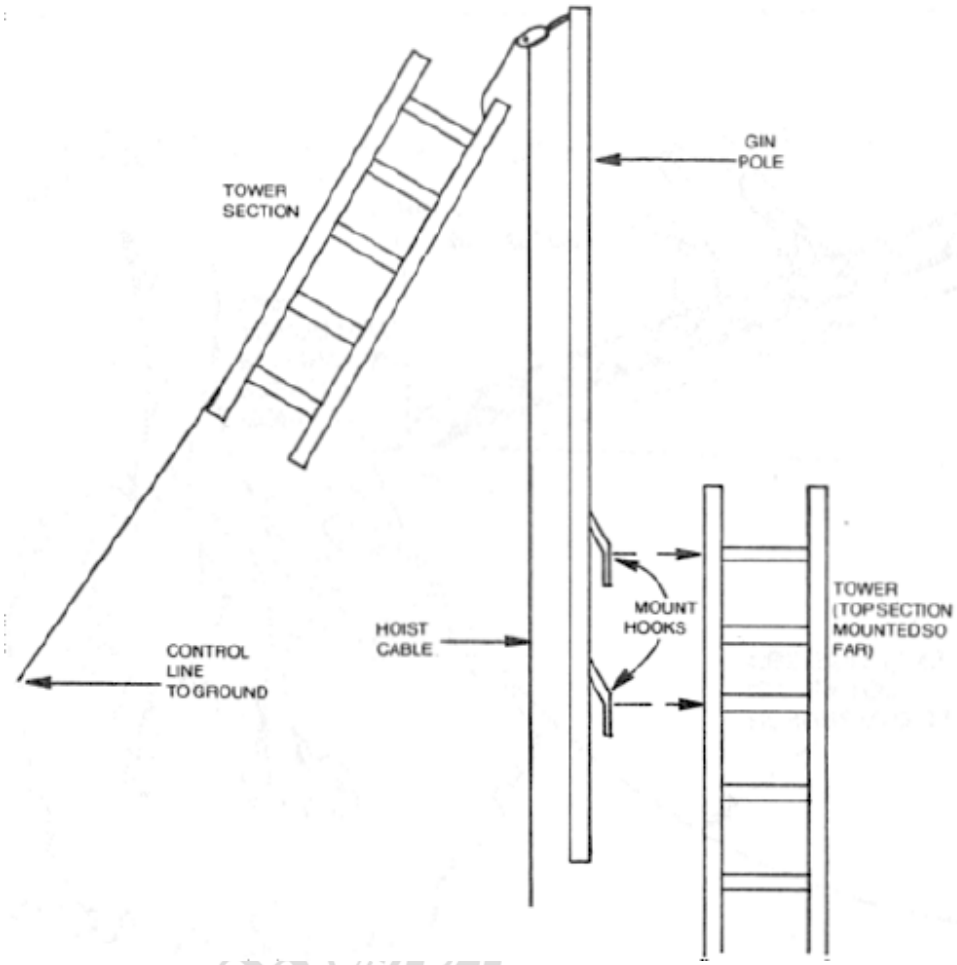

Fig. 17. The gin pole

There are two cautions that must be observed when using gin poles, despite the fact that their operation seems obvious. First, moving a gin pole up a tower is not as easy as it seems. Let an experienced tower worker do or direct the work. Second, even though supported by the gin pole, tower sections can be difficult to wrestle into place. Again, experience and care go a long way toward a safe and successful installation.

Towers, of course, come in many forms. The triangular steel or aluminum tower, raised in 10-foot sections and concreted firmly into the ground is the basic model. Two variations on this are the tubular steel (well casing) tower and the telephone pole. Tubular and triangular towers come with a variety of options, including tilt-over features, hinged bases, and systems for retracting the tower into the lowest sections (crank-up). Some of these features come in either manual or motorized versions.

These options can make the tower far more expensive than the antennas on top of it.

Selection of a tower involves attention to several factors. First, and most obvious, is the cost. Second is the presence of enough manpower and skill to erect the tower safely. Third is the safety of your own and neighboring property in the event of catastrophe. Fourth is attention to the need for available options. If you cannot climb the tower to make adjustments, for example, some form of lowering device is necessary. And finally is your basic need for the tower, and how much height you actually need.

Large antenna arrays require strong towers. Simpler and lighter antennas such as the standard three-element, three-hand Yagi or two-element quad may use lighter tower structures. With respect to height, the rule is that the higher the tower, the more difficult is the maintenance of both the tower and the antenna. In general, then, you should not buy more tower than you need. However, you can estimate that need either on the basis of present antenna plans or future projections, if the latter are fairly definite.

Like towers, the rotator which will usually be used, comes in several sizes—generally there are three. First comes the TV rotator which will handle small, light antennas such as a single-boom 2-meter Yagi or a fiberglass-arm quad. Next comes the medium-duty amateur rotator which will handle a small tribander with ease. Finally comes the largest models which will handle heavy booms holding up to six HF elements or two smaller ham antennas. All rotators have load and braking limits specified based on the wind area and the weight of the antenna. When estimating these loads, add in a safety factor to insure that ice and other weather factors will not overburden the system. A broken rotator is as hard to replace as a bent antenna. Although rotator systems range from $45 to well over $200 (cost will be outdated over time), do not select a unit based on price unless you are willing to scale down your antenna system accordingly.

FEEDLINES

The feedline or *transmission line,* transmits RF power from the station to the antenna and vice-versa. It comes in two common forms: coaxial cable and open wire.

Figure 18 shows common coaxial cable. This unbalanced line comes in many impedances and sizes. Fifty and 72 ohm varieties are the most common in amateur work and most amateur transmitters are designed to match impedances in this range. For VHF work, solid metal shielded line with an inert gas dielectric to insulate the center conductor provides the lowest losses. For HF work, the common form of coax uses a foam or plastic

insulator with braided copper wire as the shield. For amateur use, buy only the best grade of coax with very tight braiding of the shield. The added expense over lower-quality coax, if any, will pay off in fewer system troubles. Moreover, do not skimp on the size. RG-58 and RG-59-type cables are useful for power levels up to a few hundred watts in the lower HF bands, but their losses for runs over a few tens of feet at VHF are prohibitive.

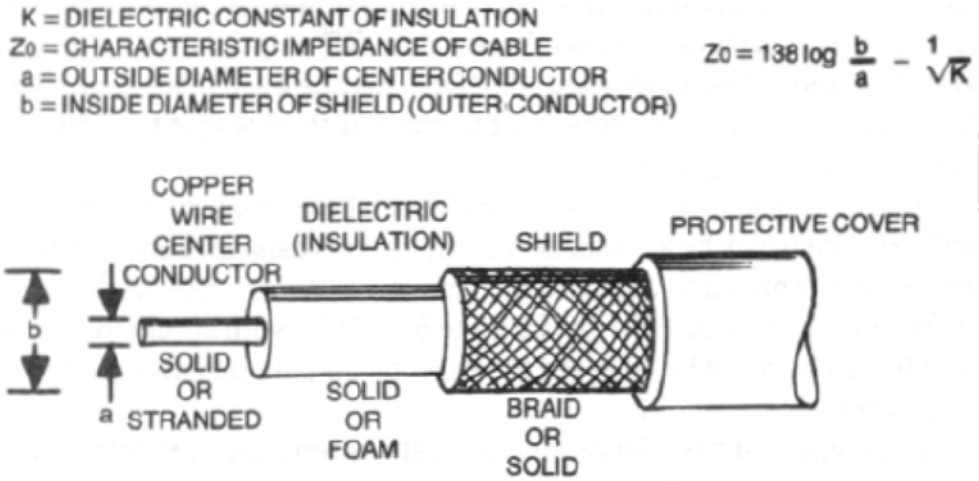

Fig. 18. Construction and impedance of coaxial cable

The category of open-wire line includes TV twin lead and ladder line. As **Figure 19** shows, this balanced line requires only constant spacing between leads. Twinlead uses a continuous plastic coating to accomplish what ladder line does with periodic insulators. Although twinlead is available with a 75-ohm characteristic impedance, American hams usually use the 300-ohm type. Ladder line is generally available in 450 and 600 ohm varieties.

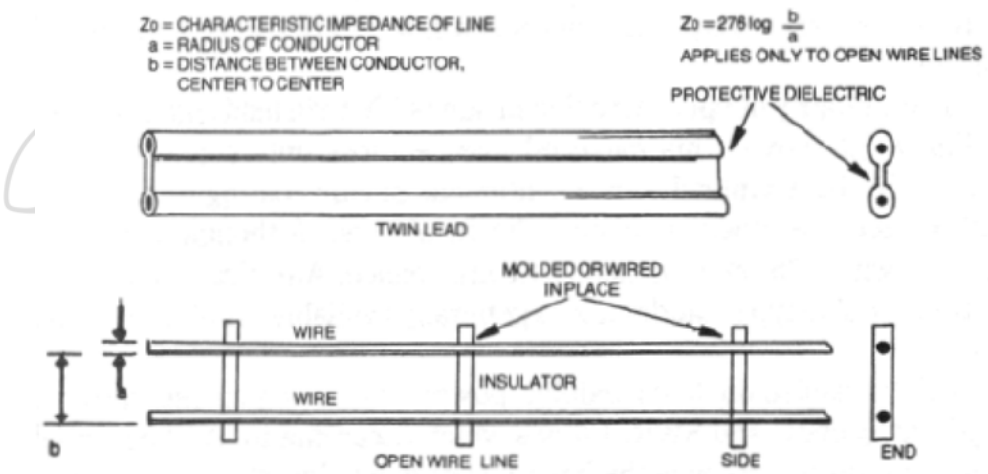

Fig. 19. Construction and impedance of parallel-line feeders

All transmission lines exhibit power losses which increase with length, frequency, and SVVR. Losses which occur due to SWR essentially act as a multiplier on top of the basic losses due to length and frequency of operation. With open-wire balanced feedlines, the basic losses due to length and frequency are so small that the multiplier from a high SWR may *still* yield a total loss *much less* than an equivalent run of perfectly-matched coaxial cable. The advantage of coaxial cables is that they can be run virtually anywhere with immunity to most disruptive influences such as metal objects and interference from other RF signals. Balanced wires must be well spaced from conductive objects and RF fields lest we lose the balance between the two wires. Loss of this balance can mean radiation from the feedline, which is *usually* less useful for communications than radiation from the antenna itself.

Our selection of feedline must be based on the antenna and the environment between the antenna and station. An unbalanced antenna, such as a quarter-wave vertical with drooping radials, may exhibit impedance close to that of an unbalanced coaxial transmission line, such as 50-ohm coax. For most HF frequencies and for short runs at VHF, coax is the proper selection for a transmission line. Low-impedance balanced antennas, such as half-wave dipoles, closely match 72-ohm coaxial cable.

Here, only an unbalanced-to-balanced 1:1 balun may be needed, since it can also be built into the center insulator. For HF frequencies, coaxial cable is usually satisfactory, even at ten meters since the losses of 100 feet of good coaxial cable are still acceptable.

For more complex antennas such as the multi-element Yagi or quad, the impedance of the antenna may not be the same as the feedline impedance. Some commercially-built beams incorporate matching networks which transform the antenna impedance to that of the recommended feedline, usually 50-ohm coaxial cable. For home-brew beams, the same principle is important: wherever possible, transform the antenna impedance to the characteristic impedance of the transmission line to minimize line losses. Whenever the antenna impedance diners from the line impedance by a factor of more than three to one, a matching network at the antenna terminals is advisable.

Outside the 3:1 ratio (a 3:1 SWR), most transmitters will not work well, which is to say that there is no setting of the output *tune* and *load* controls which provides the maximum rated RF output at the rated plate current. Fixed-tuned solid-state amplifiers may be even more sensitive to this mismatch; their protective circuits may cut their output to a low level or shut them off altogether.

With a transmatch unit, the impedance at the transmitter end of the feedline, which may be a complex combination of resistance and reactance, can be transformed into 50 ohms pure resistive. At HF. most good coax of the RG-8 type or larger will handle up to 5:1 SWRs with acceptable losses if the transmatch can be adjusted to present a 50-ohm resistive load to the transmitter.

If the antenna has a large mismatch at certain operating frequencies, then open wire feedline becomes a prime candidate for use. The multi-band Zepp is designed to be operated with a high SWR and a transmatch at the station end. So long as the balance between the leads is maintained through carefully planned paths to the antenna, the losses using open wire line will be negligible. The resurgence of the use of transmatches has reawakened interest in this type of antenna since with one wire, one feedline, and a matchbox, the amateur has access to all HF bands.

TUNERS, METERS, AND DUMMY LOADS

The transmatch used to be called an "antenna tuner." Actually, as discussed above, it is an *impedance matching* unit. Ideally, it will transform whatever combination of resistance and reactance appears at the feedline terminals to 50 ohms resistive for the modern transmitter.

Figure 20 shows two typical transmatch circuits: one for balanced and the other for unbalanced lines. The latter can be used with balanced lines with the addition of a balun, as shown by the dashed lines.

The advantages of using a transmatch go beyond impedance transformation. Transmatch components are usually large, high Q units, providing a very frequency-selective tuned circuit in addition to those in the transmitter. This can attenuate harmonics and other spurious signals by an extra 20 dB with a loss of power usually less than 5 percent. In addition, the transmatch case is a convenient location for a number of accessories, such as SWR meters, power meters, and switches for selecting antennas.

Transmatch units for the amateur bands are commercially available from about $130 on up (again, dated cost over time) or you can home brew one fairly easily. However, unless you can obtain parts through swaps or at hamfests, you may find that the total price of new parts and a case nearly equals the cost of some commercial units. Whether you build or buy one. a transmatch is a good investment.

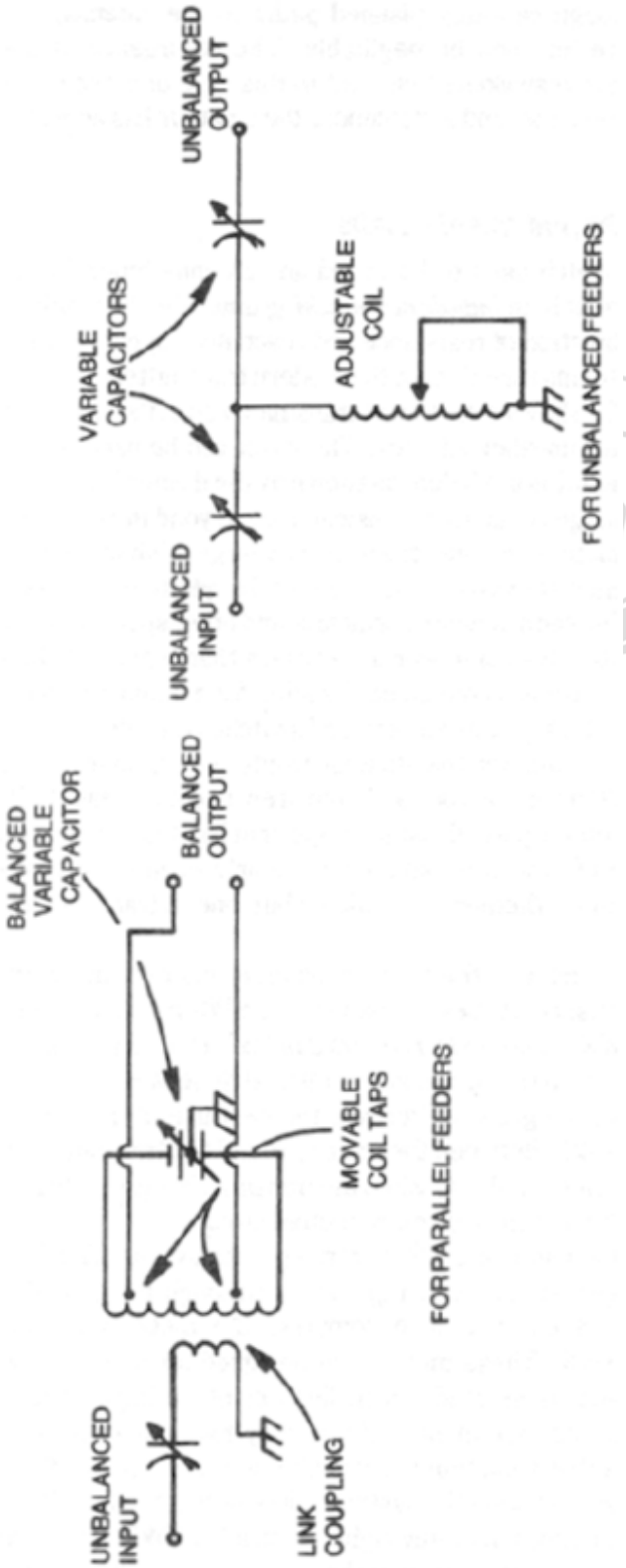

Fig. 20. Two common circuits for transmatch units

The SWR meter is the most convenient instrument for measuring antenna performance. At best, however, the SWR meter will only roughly indicate the SWR at *the point it is inserted in the line.* In almost all cases, due to line losses, the SWR or the actual mismatch between the antenna and the feedline will be greater. Perhaps the best use of the SWR meter is shown in **Figure 21**. Between the matchbox and the transmitter, the SWR meter will accurately indicate when the transmatch is properly adjusted, to match the 50 ohms of the transmitter output circuit.

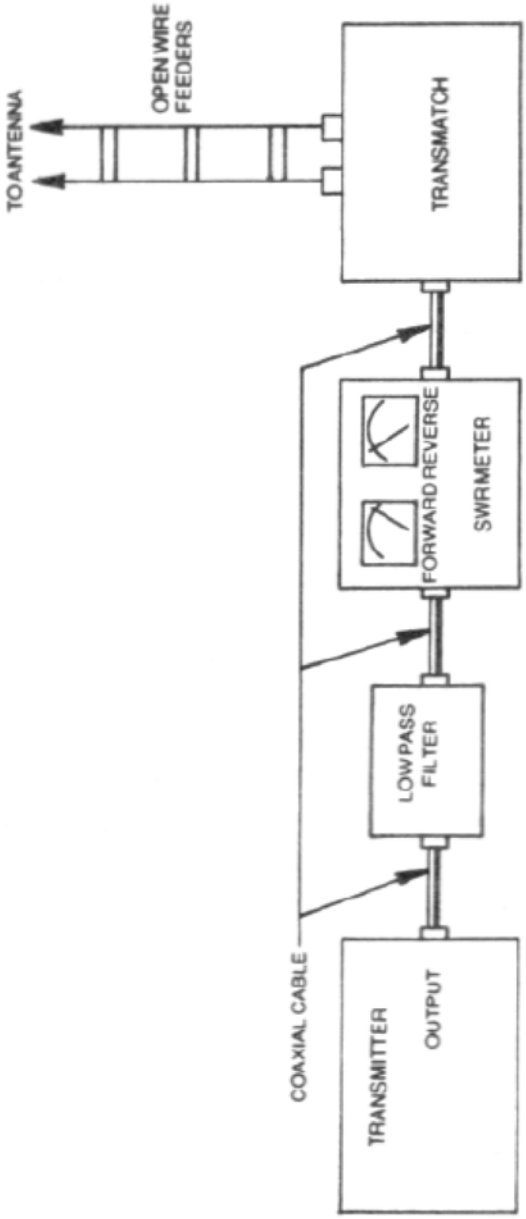

Fig. 21. Placing an SWR meter in the line

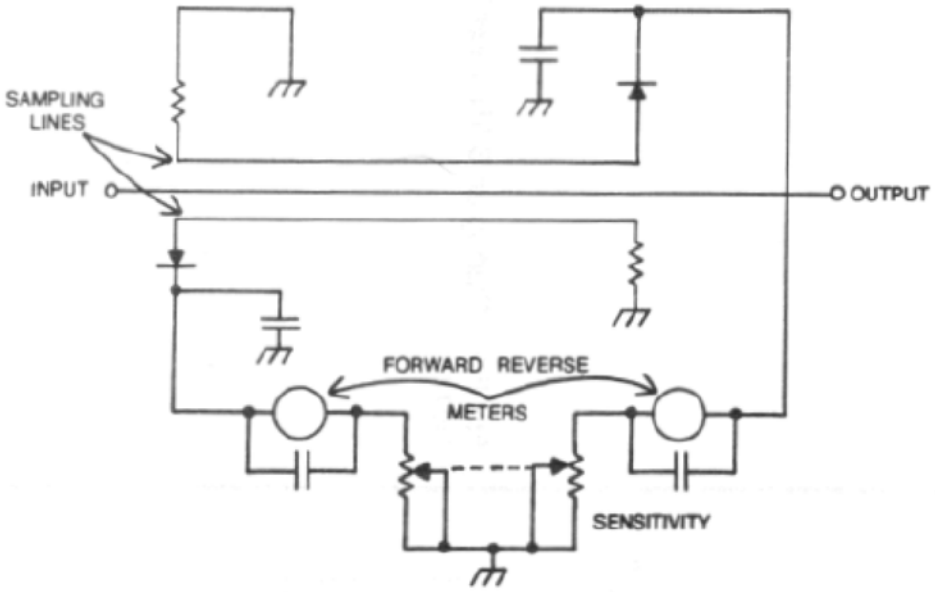

Fig. 22. Forward and reverse voltage sampling in an SWR meter

The common sort of SWR meters operate by sampling forward and reverse voltages as shown in **Figure 22**. Although the formula yielding SWR from voltages is a little complex, the meter scale is directly calibrated in SWR. These meters are designed for a single impedance, usually 50 ohms: their readings in lines of other impedances are less accurate. Thus they are most useful in only two applications: 1. a high SWR indicates that something is probably wrong in the feedline antenna system and, 2. when adjusting the system, a downward trend in SWR probably means you are doing something right. Even a 1:1 SWR at the transmitter end of the line may not mean that the antenna-to-feedline SWR is 1:1 or even that the antenna is cut to the desired frequency. Cutting a dipole to an exact frequency may not mean much in terms of RF radiation, but obtaining the best gain and front-to-back performance from a directional antenna requires accuracy of construction that an SWR meter may not reveal. Hence, use the SWR meter only as an indicator, and don't consider its reading's the whole story.

Power meters commonly available to the ham are usually built on principles similar to the SWR meter, sampling of RF voltages and convening them to watts on the meter scale. They are only accurate if the line impedance matches the meter design. The further the line impedance and the design impedance of the instrument differs, the less accurate the reading. In addition, such power meters grow less accurate as the line SWR goes up. At very best, the forward power will read an amount equal to the actual power output of the transmitter plus the amount of reverse power. Since high SWR conditions indicate impedance mismatch, even these figures will be numerically inaccurate. Power meters are very useful indicators of good

operation from the transmitter only under the conditions of a carefully matched antenna-feedline-transmitter system. For the most accurate transmitter power output readings the meter should be terminated with a dummy load.

A *dummy load* presents the transmitter with a resistive load equivalent to a properly-matched antenna but which does not radiate RF energy. Ideally, the load should have no reactance. However, not even the best resistor is perfect; hence virtually all dummy loads will show some reactance—although in the better ones, it may be negligible. The required power capacity of the dummy load will depend on the power output of the transmitter. For low power, a collection of two-watt resistors in parallel, mounted between two copper plates in a shielding can, as shown in **Figure 23**, works quite well. Commercially-made dummy loads are available for use up to the legal amateur power limit. Some such units contain resistors in a transformer oil bath inside a closed can. Others are "dry" and are air cooled. In either case, carefully observe the manufacturer's stated power and key-down time limits to prevent permanent damage to the load.

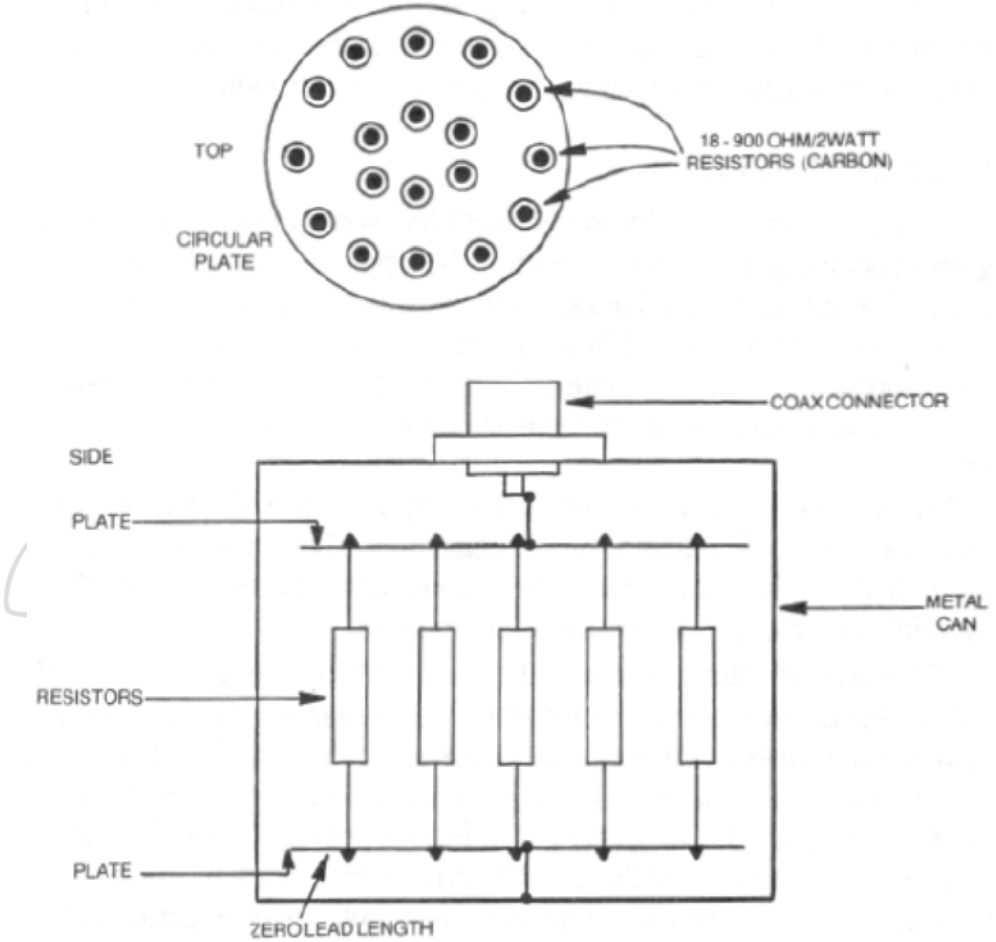

Fig. 23. Home brew low power (30 watt) dummy load

Dummy loads operate by converting RF energy into heat, and enclosure in a metal shield prevents the radiation of any unconverted RF power. Consequently, the common light bulb, often pressed into service, is *not* a good dummy load. The glass bulb permits effective radiation. In addition, its resistance is rarely 50 ohms and varies with the power level and resulting filament temperature. Strict adherence to FCC regulations requires that we do all initial tune ups and testing with a proper dummy load to prevent unnecessary on-the-air radiation.

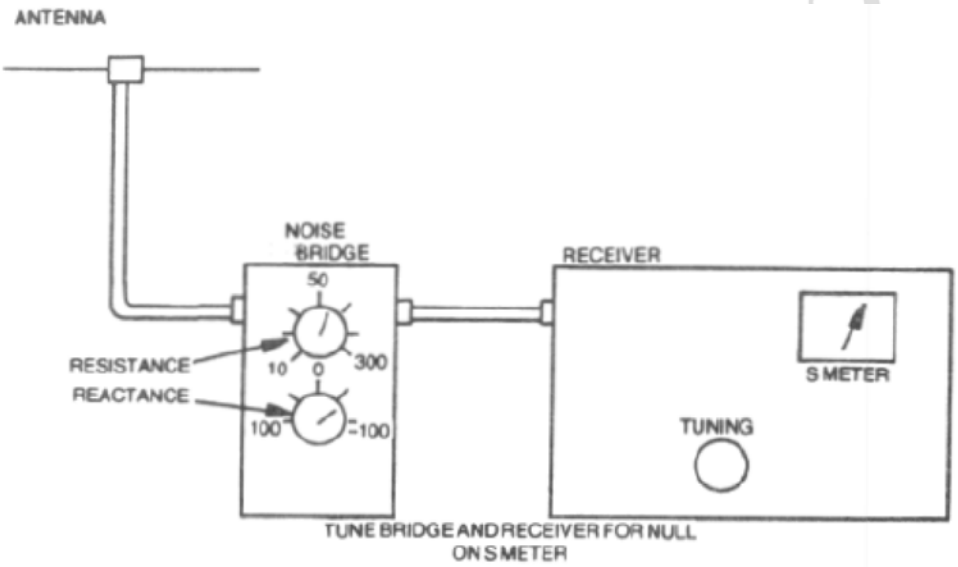

Fig. 24. Using a noise generator bridge

Numerous other antenna testing devices can be purchased or built Most are designed for use with the antenna disconnected from the rig, as would be the case when installing it. For example, the noise generator and impedance bridge set-up in **Figure 24** can tell you both the resistive and reactive components of the feedline impedance all by tuning the receiver to a noise null and increasing its depth with (he resistive and reactive controls. Alternatively, energy from a grid dip oscillator or other low-power source, when fed through an impedance bridge, will provide the same information, as shown in **Figure 25**. In contrast, the SWK and power meters discussed in this section remain in the line during operation of the equipment and serve as rough monitors of performance.

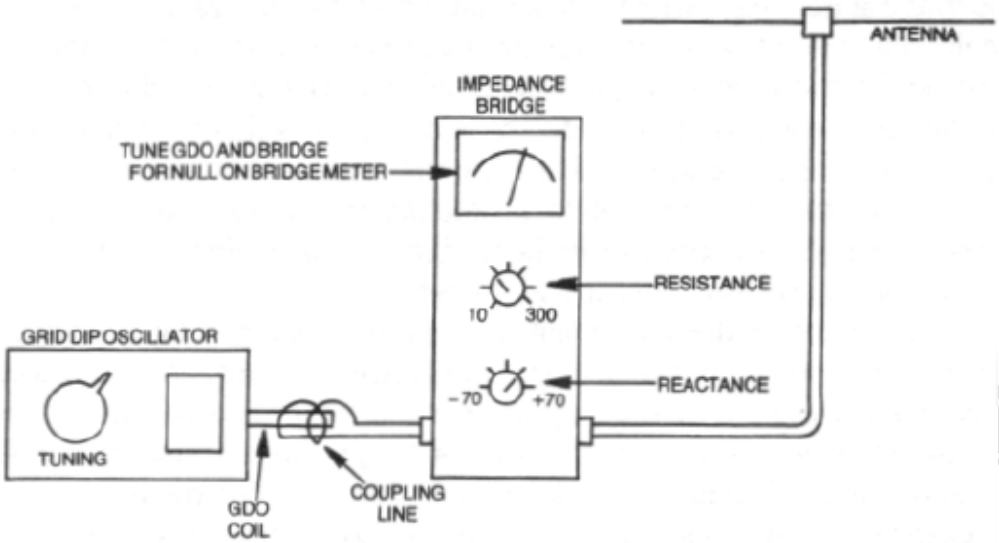

Fig. 25. Using an impedance bridge

SWITCHING AND SAFETY

Over the years, considerable thought has gone into making transmitting and receiving equipment safe for the operator. Metal enclosures, fuses, and other safety devices have made it difficult for the operator to receive electrical shocks. (Open equipment under repair is another matter, and will be discussed later.) Antennas however, are the weak link in the system. Effective safety measures *are* available, but too few of us use them.

The antenna structure: Antennas require care during planning, installation, use, maintenance, and disassembly. Even a simple antenna is a large structure which has physical and electrical properties which will get you into trouble unless you are safety minded.

Planning: Planning a safe antenna installation begins where this piece began: with the arrangement of antennas in the yard so as to minimize the chances of damage to people and property should they come down. In addition, you should plan antenna placement to create as few dangers as possible during installation. For example, be sure that there is a clear area for work, and if the installation involves a tower, make sure its pieces do not have to be forced through tree limbs or obstructions during assembly. In particular, avoid placing antennas and supporting structures near electrical lines, and *be sure* that the assembly process will not require that *any* parts pass over or near power lines. If you cannot relocate the antenna structure, then have your power company move the power drop to your house.

Installation: Putting up antennas requires careful attention to common sense and safety. Ground crews should wear hard hats. Climbers should be

experienced and use safety belts. Ladders should be set firmly in place. The use of electrical tools at the top of the tower should be avoided; if their use is absolutely necessary, effective grounding of the tool should be verified before raising it to the tower top. Do not depend on muscles for support: use winches, guying, and other forms of temporary support to be sure pieces halfway up do not fall all the way down. Wear no jewelry or watches/but do wear adequate protective clothing. If you and the crew cannot lift something easily, do not lift it at all; get more help or use mechanical aids. This only begins the list of safety rules; you can add to them. Remember, it is *less costly* to *pay professionals* to do the antenna work than it is to injure yourself, a friend or a neighbor.

Use: The antenna in use is *hot* with potentially lethal electrical energy. Thus, it should be inaccessible to anyone during operation. In practical terms, this means that the antenna should be high enough at all points so that no one can touch it. In addition, take precautions so that no one can climb a tower or nearby objects and touch the antenna. Also be sure that the antenna does not couple energy to supporting wires or towers to make them dangerous. Although these points seem obvious, many operators let the ends of inverted V antennas come down to reachable levels. Others leave towers unprotected so that any curious youngster might climb them.

Maintenance: Like any other mechanical structure, antennas will not last forever. They need periodic maintenance to insure proper electrical performance and a safe mechanical structure. Dipoles need to be lowered periodically to check cable connections and to adjust their length after a year of stretching. Antennas assembled from aluminum tubing need to be checked for metal fatigue and to verify solid mechanical and electrical connections. Chromed or stainless hardware is not eternal, and corrosion *will* appear. Rotators require inspection for wear and lubrication if recommended by the manufacturer. Cables, feedlines and connectors need mechanical and electrical checks, as well as renewal of weatherproofing. Again, this list is only a reminder for the longer specific list you should develop for your own station.

Disassembly: All of the precautions you used in erecting your antenna system should also be used when you take it down. In fact, you should use more care, since many of the mechanical connections may have become frozen or corroded tight with the passage of many seasons in the weather. Therefore, disassembly will require more muscle and parts may tend to separate suddenly. If they catch you unaware, it could result in injury.

Weather: The principal concern with the weather is with regard to electrical storms, but there are other problems which can stem from weather

conditions. Corrosion, ice, moisture in the feedline, and other such troubles can damage our antennas physically and electrically. However, electrical storms can destroy not only our antenna, but also our shacks and homes unless we take safety precautions.

It is not necessary to have a direct lightning strike for equipment to be damaged. Static charges on the antenna system can generate high voltages when a discharge occurs in the vicinity. Enough charge can build up on an ungrounded antenna system even in clear weather to cause equipment damage. To protect ourselves from lightning and static charges we need to install safety devices and develop safety habits.

There is nothing that provides complete protection against the direct lightning strike on the antenna except total disconnection from the equipment and the house structure itself. The safest antennas are those operated at dc ground with the mounting structure, such as the tower, also well grounded with a heavy strap to a rod driven at least eight feet into the ground. This system is safe, however, only if the feedline is disconnected at the tower and *itself* grounded. These measures will not guarantee that the antenna structure will survive a direct stroke, but they will tend *to limit* damage to the structure while protecting the shack and equipment. Likewise, lightning arresters in the feedline are only effective if the cable is disconnected before it reaches the house.

Protection of the equipment consists of disconnecting it from the power lines and antenna cables. During electrical storms, power lines can develop charges which show up as very short duration voltage surges. Damage to tube type equipment is rare, since the larger elements of tubes require significant surge duration to develop destructive heat or breakdown voltage. Solid state equipment is more sensitive to line surges, which can sometimes induce destructive voltages even with the equipment power switch off. There are voltage surge limiting devices which can be added to equipment power supplies, but total disconnection is more effective. We can use either a master ac switch to disconnect both sides of the line where the power enters the shack, or we can simply unplug equipment.

Static charges can also be built up in feeders which are not connected to antennas, so an antenna grounding switch is also advisable. There are commercially-available antenna selector switches which connect all coaxial line not in use to a ground lug. These switches are generally effective in eliminating static charge damage if the switch is properly connected to a low resistance ground system.

The general point of all these measures is to disconnect all equipment susceptible to damage from surge voltage sources and to ground all systems susceptible to the buildup of a static charge. Besides installation of safety devices such as ground rods, coaxial switches, and lightning arresters, complete safety requires the development of good habits. Disconnecting equipment from antennas and power sources requires action on our part, and we should make this as regular a habit as brushing our teeth. Only with this kind of care can we be assured that our well designed antenna system is as safe as it is effective for communications. **-30-**

Antenna Systems Checklist

1. Property: make a sketch of your property locating the following (with dimensions where applicable):
   a. House and other buildings
   b. Trees with heights and spread
   c. Activity areas
   d. Power and telephone lines in the yard and on borders
   e. Underground utilities and sewer lines
   f. Relevant objects on neighboring property
   NOTE: use this sketch to plan your antenna installations.
2. Antenna types: evaluate the following antenna types with respect to your operations and your property:

Antenna	*Operation*		*Property*	
	Good	*Poor*	*Will fit*	*Will not fit*
a. Half wave dipole	____	____	____	____
b. Quarter wave vertical	____	____	____	____
c. Inverted V	____	____	____	____
d. Center or end fed Zepp	____	____	____	____
e. Multi-band dipole	____	____	____	____
f. Multi-band vertical	____	____	____	____
g. Single band Yagi	____	____	____	____
h. Multi-band Yagi	____	____	____	____
i. Multi-band quad	____	____	____	____
j. Other (specify)	____	____	____	____

3. Antenna supports: evaluate the available and necessary support structures for your antennas:
   a. Available trees
   b. Support masts for wire antenna
   c. Telephone pole
   d. Metal tower (specify type)
4. Towers: evaluate the following elements of towers:
   a. Height
   b. Material and type (e.g. tubular/triangular)
   c. Convenience features: Tilt-over Retractable Hinge base
   d. Antenna size
   e. Rotator capabilities
   f. Erection difficulty
   g. Maintenance requirements
5. Feedlines: with respect to each antenna planned, evaluate feedline needs with attention to the following items:
   a. Type (open wire or coaxial)
   b. Impedance
   c. Power level
   d. Need for balun
   e. Need for transmatch
6. Accessories: specify the accessories you require for each of your planned antennas:
   a. Transmatch (specify power level and features) _____
   b. In-line power meter _____
   c. SWR meter _____
   d. Dummy load _____
   e. Other (specify) _____
7. Safety: for each antenna, specify the means you will use to achieve each of the following safety features:
   a. Grounding of antenna structure
   b. Disconnection of feedline at antenna
   c. Disconnection of equipment in the shack
   d. Grounding of all unused antennas

© All Rights Reserved World Wide
ANTENNEX LLC

antennex